MUNTERS PRODUCT INFORMATION

MG Series Desiccant Dehumidifier

Complete Dehumidification Package

MG90

Efficiency and Reliability

- Desiccant dehumidification – high efficiency, even below 0° C
- Advanced rotor technology – high capacity with economic operating costs
- Efficiently designed electrical system – enhanced reliability

Installation and Operation

- Basic control panel – automatic/manual switch and humidistat socket
- Humidistat plug with low voltage – easy installation without a qualified electrician
- Humidistat control – optional control of entire unit or reactivation heater only
- Easily disassembled sections – fast inspection and service
- Replaceable EU3 filter – enhances air quality
- Unit requires minimal floor area – allows installation in confined spaces
- Accessories and options – provides versatility for specific applications

Product Description

The MG90 desiccant dehumidifier is designed to efficiently dehumidify air. Its very compact construction incorporates sections held together by four bolts. The fan, desiccant rotor and reactivation heater are secured in fixed positions within their respective sections without utilizing additional attachments. One of the sections contains a distribution chamber with isolated sections that provide a precise balance for dehumidification and reactivation airflows. Its rugged casing is constructed from corrosion resistant die cast aluminium.

The electrical control system conforms to EN 60204 (IEC204) standards and the electrical components are assembled in the upper compartment. MG Series dehumidifiers conform to both harmonised European Standards and to CE marking specifications.

Munters Rotor Technology

The desiccant rotor is manufactured from a corrugated composite material that is highly effective at attracting and holding water vapour. Every Munters dehumidifier applies a unique rotor technology. Airflows, air conditions, rotor sections, and rotor rotation speeds are optimised for specific applications. An innovative control system maximises the units energy efficiency.

A characteristic of the MG Series rotor technology is an efficient air distribution chamber which divides the sectors and balances the dehumidification and reactivation airflows.

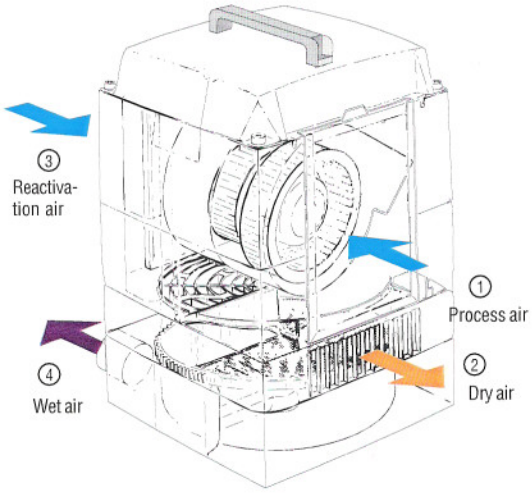

Munters

Model MG90

Diagram measurements are for reference only.

Scaled and dimensioned AutoCAD drawings are available in Munters' DryCap program.

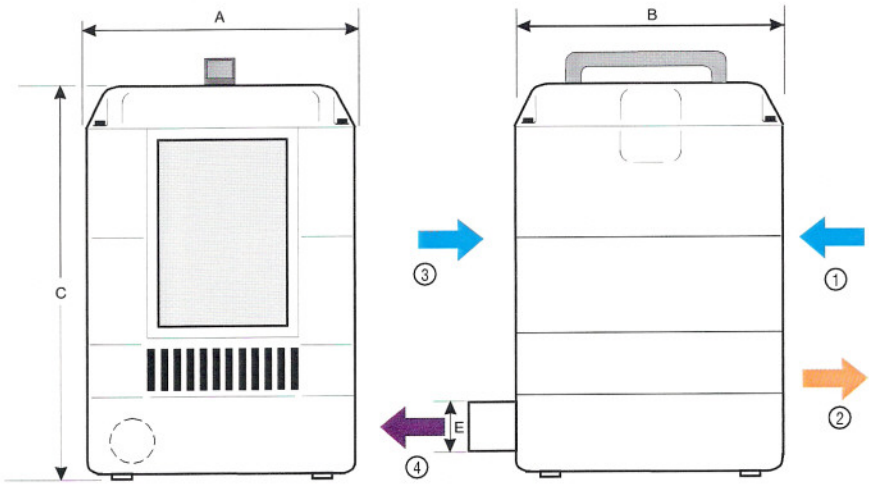

Width (A)	Depth (B)	Height (C)	Diam.[1] (D)	Diam. (E)	Weight
275 mm	275 mm	388 mm	62,5 mm	48 mm	10 kg

[1] Connection piece accessory option

Dehumidification capacity

Approximate capacity in kg/h. For more detailed information, please contact your nearest Munters location or refer to Munters' DryCap program.

1. Process air temperature, °C
2. Process air relative humidity, % RH
3. Dehumidification capacity, kg/h (moisture removal kg/hour)

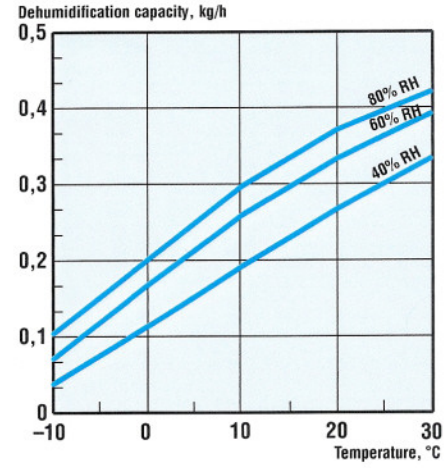

Technical Specifications

Process air[1]

Freeblowing at 50Hz (m^3/h)	110
Freeblowing at 60Hz (m^3/h)	120
Rated airflow (m^3/s)	0,025
Rated airflow (m^3/h)	90
Available static pressure 50Hz (Pa)	100
Available static pressure 60Hz (Pa)	120
Fan motor power (kW)	0,090

Reactivation air[1]

Rated airflow (m^3/s)	0,005
Rated airflow (m^3/h)	20
Available static pressure (Pa)	100
Fan motor power (kW)[2]	-

Total power, voltage and current (amps/phase)

Total power (kW)	0,740
115V 1~50/60Hz (A)	6,5
200V 1~50/60Hz (A)	3,7
230V 1~50/60Hz (A)	3,2
240V 1~50/60Hz (A)	3,1

Reactivation air heater

Heater power (kW)	0,65
Temperature increase across heater (°C)	97

Miscellaneous data

Operating temperature (°C)	-20 / +40
Drive motor power (W)	5
Max noise level unducted (dBA)	56
Air filter, standard	EU3
IEC protective class (unit)	IP44
IEC protective class (electrical panel)	IP54
Fan motor winding insulation grade	Class B
Drive motor winding insulation grade	Class B
High temperature cut-out (°C)	130±5

[1] Stated performance based on 20°C and air density of 1,2kg/m^3
[2] Common motor for process and reactivation fans

Options[1]

- Accessory kit includes:
  - Connection pieces for process air and reactivation air
  - Connection piece for dry air
  - Orifice plates for obtaining reduced airflows
  - Humidistat cable with connection plug (suitable dehumidification socket)
- Wall bracket
- Electromechanical humidistat

[1] MG Series dehumidifiers are always delivered complete with wall pipe and hose for wet air.

Munters

Distributor

Munters Europe AB
www.munters.com

Munters Europe AB
Dehumidification Division
Box 434
S-191 24 Sollentuna
SWEDEN
Tel: +46 8 626 63 00
Fax: +46 8 626 63 65

Subject to change without notice

Produced by Wikström, Uppsala
Printed matter 341 051

DH/MEA/PGBint-0041-01/00