SEELEY INTERNATIONAL

SuperStealth Supercool

TECHNICAL SPECIFICATIONS - TBSI 580

GENERAL SPECIFICATIONS:

CABINET and WATER RESERVOIR
The cabinet and water reservoir components are injection moulded structural foam polypropylene (Permatuf®). The cabinet and reservoir are UV stabilised and corrosion free. The major components clip together without additional fasteners. The pump is secured with two stainless steel screws.

FAN
The fan is a multi blade assembly constructed of glass reinforced polypropylene. The blades are aerofoil shaped. The fan is mounted directly to the motor shaft by means of a set screw.

FAN MOTORS
The fan motor is a single phase inverter motor, with die-cast fully enclosed aluminium frame. The motor and fan assembly are supported on an injection moulded glass reinforced ABS venturi ring via a glass reinforced polypropylene motor mount. The fan motor is fitted with a polarised plug for quick removal and replacement.

AutoWinterseal™
The AutoWinterseal™ consists of two semi-circular, polypropylene blades, hinged and counterbalanced, to open automatically when the fan is activated, and to close when the fan is switched off. Latching is by magnets to steel striker plates.

MAIN CONNECTION DUCT
The main connection duct must incorporate a raw edge or safe edge to avoid fouling of the AutoWinterseal™.

ELECTRICAL CONTROL
The electrical control box is pre-wired within the cooler.

3 metre long power supply cord is supplied as standard on all models. Provision is included for plug-in connection of drain valve and solenoid kits. A 10 amp anti-surge fuse is fitted to the underside of the enclosure.

THERMOSTAT CONTROL
All TBSI model coolers feature the MagIQtouch controller, for full automatic control. The MagIQcool controller is available as an alternative option. Connection of either controller to the control box is via a 20 metre low voltage cable.

WATER CONNECTION
Water supply connection is via a flexible connector which is terminated with a 1/2" BSP compression nipple. An isolating valve must be fitted adjacent to the cooler for service. A drain-down facility is required in areas subject to freezing.

The patented water distribution system is an integral part of the lid, and can be readily viewed from the top by removing the pad frame assembly.

COOLING PADS
Cooling filter pads are Chillcel® fabricated, honeycomb, high efficiency type.

SPECIAL FEATURES
SuperStealth Supercool TBSI series coolers are available in four (4) colours, "Slate Grey", "Terracotta", "Beige" and "Heritage Green".

AIR FLOW PERFORMANCE SUMMARY

Model	Airflow L/s (m^3/h) @ 80Pa	Motor W	Air Flow - L/s (m^3/h) versus Static Pressure (Pa)						
			0	40	80	120	160	200	240
TBSI580	3000 (10800)	950	3300 (11880)	3180 (11448)	3000 (10800)	2770 (9972)	2500 (9000)	2190 (7884)	1820 (6552)

It is a policy of Seeley International to introduce continual product improvement. Accordingly specifications are subject to change without notice.

SEELEY INTERNATIONAL

SuperStealth Supercool

TECHNICAL SPECIFICATIONS - TBSI 580

Specification		TBSI580
Airflow @ 80Pa	(L/s)	3000
	(m^3h)	10800
Cooling Capacity*	(kW)	16.3
Power Consumption (total)	Power - Max (W)	1440
	Current - Rated (A)	7.0
Power Supply	Voltage / Phases / Hz	220-240/1/50
Controller	Type	Digital
Fan	Type	Axial
	Diameter - External (mm)	534
Motor	Type	Inverter
	Speed - Max (rpm)	1700 VAR
	Output Nominal (W)	950
	Overload	Two 'one shot' fuses
Pump (50Hz)	Type	Centrifugal
	Motor	Synchronous
	Current - Rated (A)	0.2
	Flow Rate (L/min)	21
	Voltage / Phases / Hz	230/1/50
	Overload	Auto Reset
	Enclosure Rating	IPX4
Pump (60Hz)	Type	Centrifugal
	Motor	Synchronous
	Current - Rated (A)	0.4
	Flow Rate (L/min)	21
	Voltage / Phases / Hz	230/1/60
	Overload	Auto Reset
	Enclosure Rating	IPX4
Cooling Pad Chillcel	Size (mm)	850x526Hx120 (4 pads)
	Pad Area (m^2)	1.79
Water	Tank Capacity (L)	23
	Inlet (mm/inches)	12.7mm 1/2" male BSP
	Drain (mm/inches) Configurable to local requirements	40mm $1^{1/2}$" male BSP
Shipping	Dimensions (mm) including pallet	1150x1150x902H
	Volume (m^3)	1.20
	Mass - Shipping (kg)	68
	Operating (kg)	91
Connecting Duct (raw edged)	Length & Width (mm)	550x550

* Cooling capacity measured to Australian Standard AS2913-2000, ambient of 38°C dry bulb & 21°C wet bulb, with room exit temperature of 27.4°C.

NATA WORLD RECOGNISED ACCREDITATION

Air flow performance has been measured in accordance with Australian Standard AS2913:2000 "Evaporative Air Conditioning Equipment" by Meridian Laboratories Pty Ltd

***Meridian Laboratories is registered by the National Association of Testing Authorities, Australia. The tests reported herein have been performed in accordance with its terms of registration. Registration No.: 3697**

SEELEY INTERNATIONAL

SuperStealth Supercool

TECHNICAL SPECIFICATIONS - TBSI 580

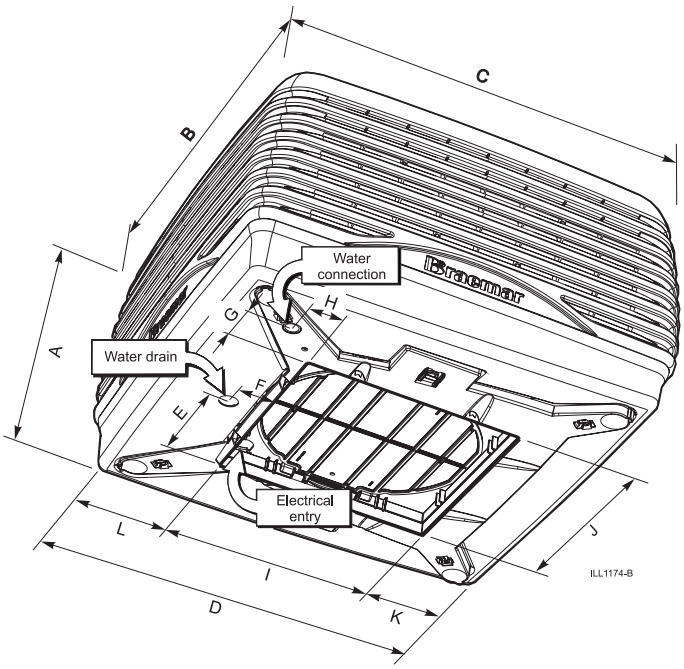

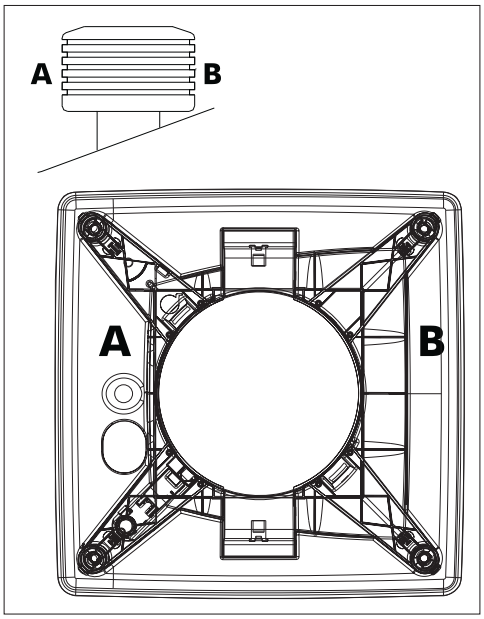

Model	A	B	C	D	E	F	G	H	I	J	K	L
TBSI580	835 (32.9)	1150 (45.3)	1150 (45.3)	1080 (42.5)	275 (10.8)	95 (3.7)	82 (3.2)	82 (3.2)	555 (21.85)	555 (21.85)	249 (9.8)	279 (11.0)
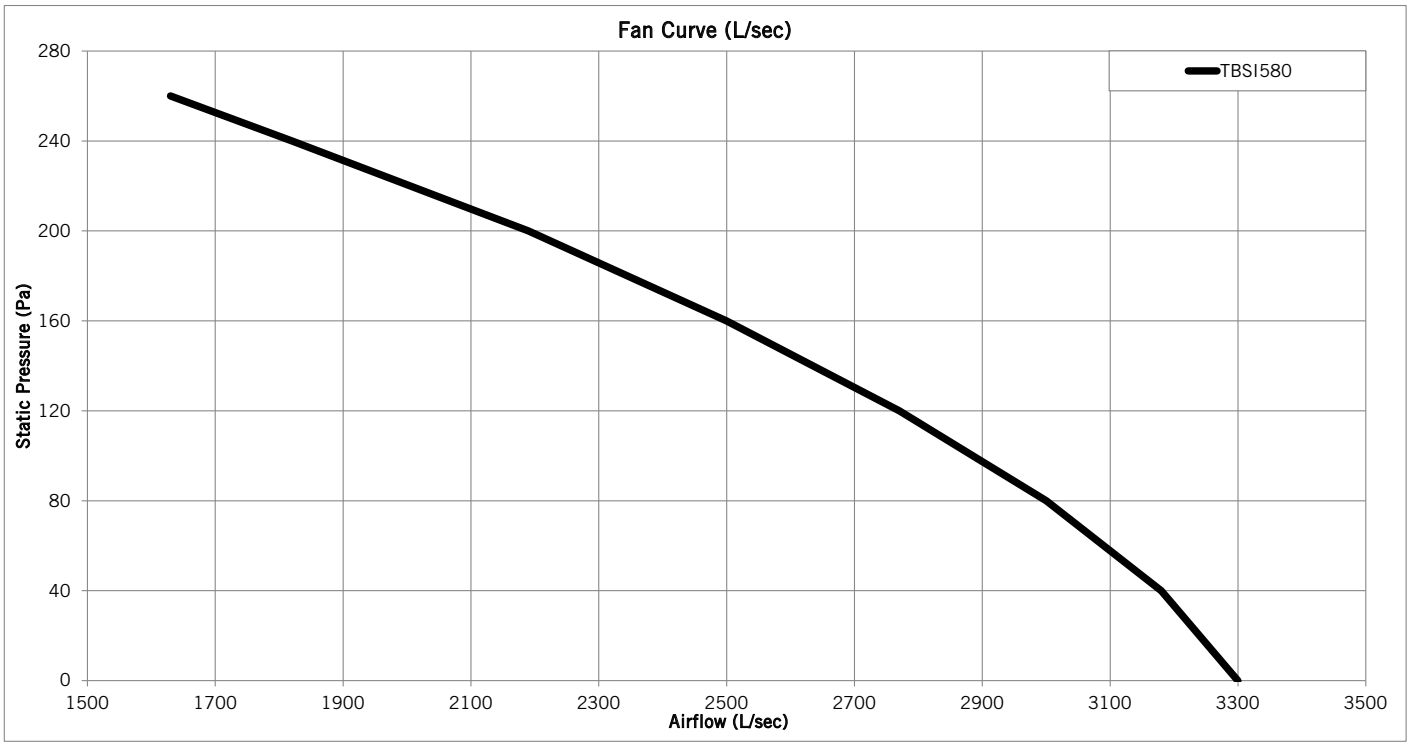
Dimensions are in mm (inches in brackets).