MUNTERS PRODUCT INFORMATION

M120 Desiccant Dehumidifier

Complete Dehumidification Package

M120

Product Description

The M120 desiccant dehumidifier is designed to efficiently dehumidify air . Its very compact construction incorporates sections held together by four bolts. The sections contain fans that are driven by a common motor, a direct gear driven desiccant rotor, and a reactivation airflow heater. The two end casings contain distribution chambers with isolated sections that provide a precise balance for dehumidification and reactivation airflows. Its rugged casing is constructed from corrosion resistant die cast aluminium.

The electrical control system conforms to EN 60204 (IEC204) standards and the electrical components are assembled in the front compartment. The M120 dehumidifier conforms to both harmonised European Standards and to CE marking specifications.

Munters Rotor Technology

The desiccant rotor is manufactured from a corrugated composite material that is highly effective at attracting and holding water vapour. Every Munters dehumidifier applies a unique rotor technology. Airflows, air conditions, rotor sections, and rotor rotation speeds are optimised for specific applications. An innovative control system maximises the units energy efficiency.

A characteristic of the M120 rotor technology is an efficient air distribution chamber which divides the sectors and balances the dehumidification and reactivation airflows.

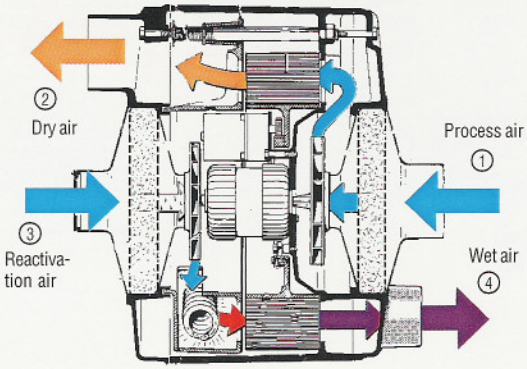

Efficiency and Reliability

- Desiccant dehumidification – high efficiency, even below 0° C
- Advanced rotor technology – high capacity with economic operating costs
- Efficiently designed electrical system – enhanced reliability
- Shock and vibration tested – mobile application possibilities

Installation and Operation

- Basic control panel – automatic/manual switch and humidistat socket
- Humidistat plug with low voltage – easy installation without a qualified electrician
- Humidistat control – optional control of entire unit or reactivation heater only
- Easily disassembled sections – fast inspection and service
- Replaceable EU3 filter – enhances air quality
- Unit requires minimal floor area – allows installation in confined spaces
- Duct connections conform to ISO 7807 standards – simplifies air duct installation

Munters

Model M120

Diagram measurements are for reference only.

Scaled and dimensioned AutoCAD drawings are available in Munters' DryCap program.

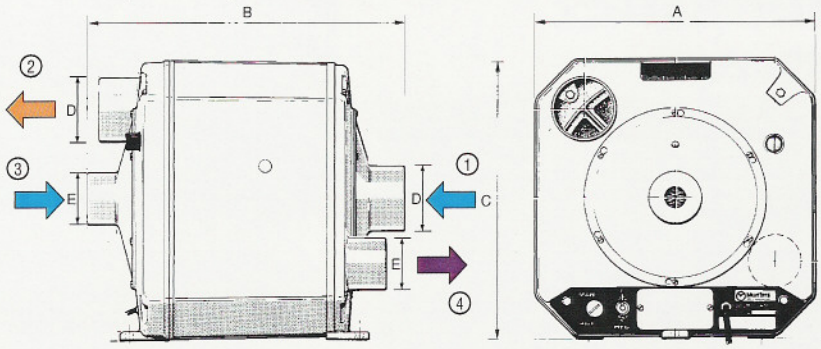

Width (A)	Depth (B)	Height (C)	Diam. (D)	Diam. (E)	Weight
425 mm	481 mm	425 mm	100 mm	80 mm	26 kg

Dehumidification capacity

Approximate capacity in kg/h. For more detailed information, please contact your nearest Munters location or refer to Munters' DryCap program.

1. Process air temperature, °C
2. Process air relative humidity, % RH
3. Dehumidification capacity, kg/h (moisture removal kg/hour)

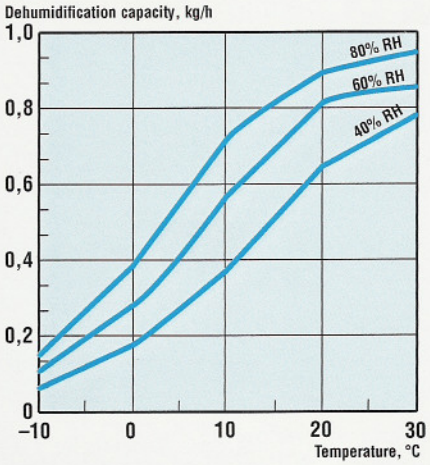

Technical Specifications

Process air[1]

Freeblowing air 50Hz (m³/h)	180
Freeblowing air 60Hz (m³/h)	210
Rated airflow (m³/s)	0,033
Rated airflow (m³/h)	120
Available static pressure 50Hz (Pa)	200
Available static pressure 60Hz (Pa)	360
Fan motor power (kW)	0,030

Reactivation air[1]

Rated airflow (m³/s)	0,010
Rated airflow (m³/h)	35
Available static pressure (Pa)	100
Fan motor power (kW)[2]	–

Total power, voltage and current (amps/phase)

Total power (kW)	1,3
115V 1~50Hz (A)	10,9
115V 1~60Hz (A)	11,6
200V 1~50Hz (A)	6,3
200V 1~60Hz (A)	6,6
220V 1~50Hz (A)	5,7
220V 1~60Hz (A)	6,0
230V 1~50Hz (A)	5,7
230V 1~60Hz (A)	6,0
240V 1~50Hz (A)	5,7
240V 1~60Hz (A)	6,0

Reactivation air heater

Heater power (kW)	1,2
Temperature increase across heater (°C)	100

Miscellaneous data

Operating temperature (°C)	–40/+40
Drive motor power (W)	18
Max noise level unducted (dBA)	68
Air filter, standard	EU3
IEC protective class (unit)	IP44
IEC protective class (electrical panel)	IP44
Fan motor winding insulation grade	Class F
Drive motor winding insulation grade	Class B
High temperature cut-out (°C)	150±5

[1] Stated performance based on 20°C and air density of 1,2kg/m³
[2] Common motor for process and reactivation fans

Options

- Wall bracket
- Floor stand
- Air cooled condenser
- Enhanced filter
- Electromechanical humidistat

Munters

Distributor

Munters Europe AB
www.munters.com

Munters Europe AB
Dehumidification Division
Box 434
S-191 24 Sollentuna
SWEDEN
Tel: +46 8 626 63 00
Fax: +46 8 626 63 65

Subject to change without notice

Produced by Wikstrøms, Uppsala
Printed matter 341 051

DH/MEA/PGBint-0038-10/00